PRODUCT SHEET

CLEARANCE OFFERS

LA5484/LED/CLEAR

Petite Friture Vertigo Nova Large LED Pendant CLEARANCE

SOURCE: https://www.davidvillagelighting.co.uk/product/Petite-Friture-Vertigo-Nova-Large-LED-Pendant-CLEARANCE/10002887

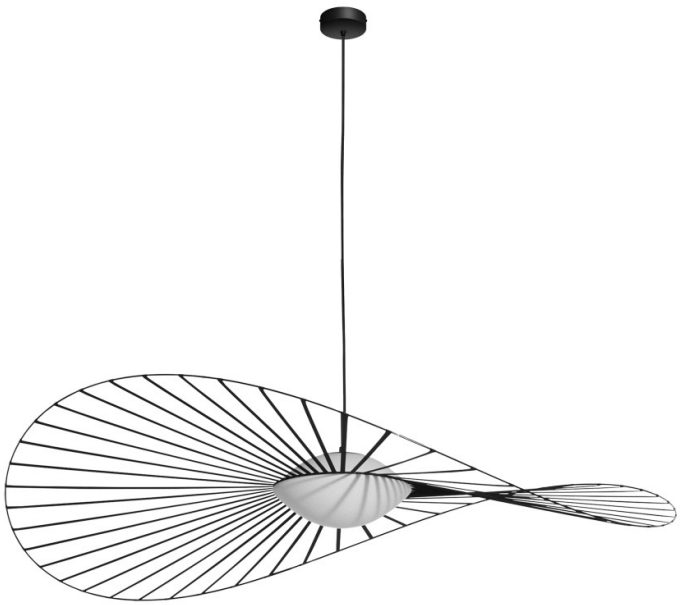

PRODUCT DESCRIPTION

Designer: Constance Guisset

Petite Friture Vertigo Nova LED Pendant

BRAND NEW, OVERSTOCKED. BOXED IN A-GRADE ORIGINAL PACKAGING.
1 x Black/White Available.

New for 2020, Petite Friture have released an LED version of their iconic **Vertigo Pendant**, which was first released in 2010 and designed by Constance Guisset. The pendant is a lightweight, sophisticated, delicate piece that reflects the light in bands of shadows across the room. The material and ribboned structure allow for a graceful light display, being an ethereal and floating presence in your interior.

The Vertigo Nova pendant is available in 2 subtle colours, black or white, and 3 sizes: small, medium and large, so you can find the right fit for your space. The integrated LED light source allows for a long-lasting glow, and the round diffuser means the light is soft and spreads evenly throughout the room. Do not miss out on this modern icon!

PRODUCT SPECIFICATION

Light Source:	10W, 2700K, 1350 lumens
IP Code:	20
Dimming:	Dimmable via mains phase dimming.
Dimensions:	Ø190cm Height: 13.2cm Cable Length: 300cm

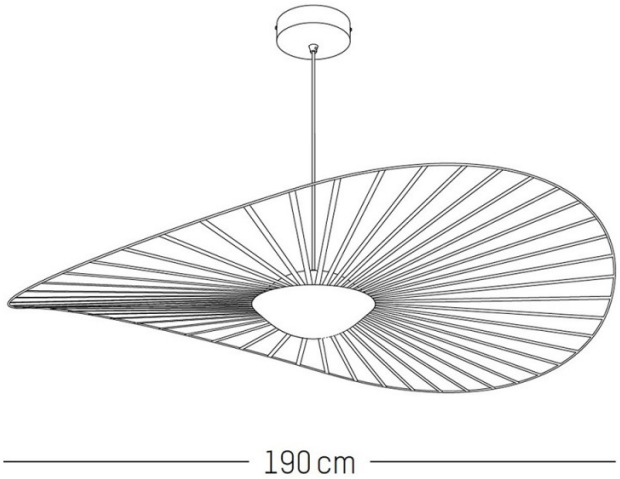

For all sales and technical enquiries, please contact:

+44 (0)114 263 4266

info@davidvillagelighting.co.uk

www.davidvillagelighting.co.uk